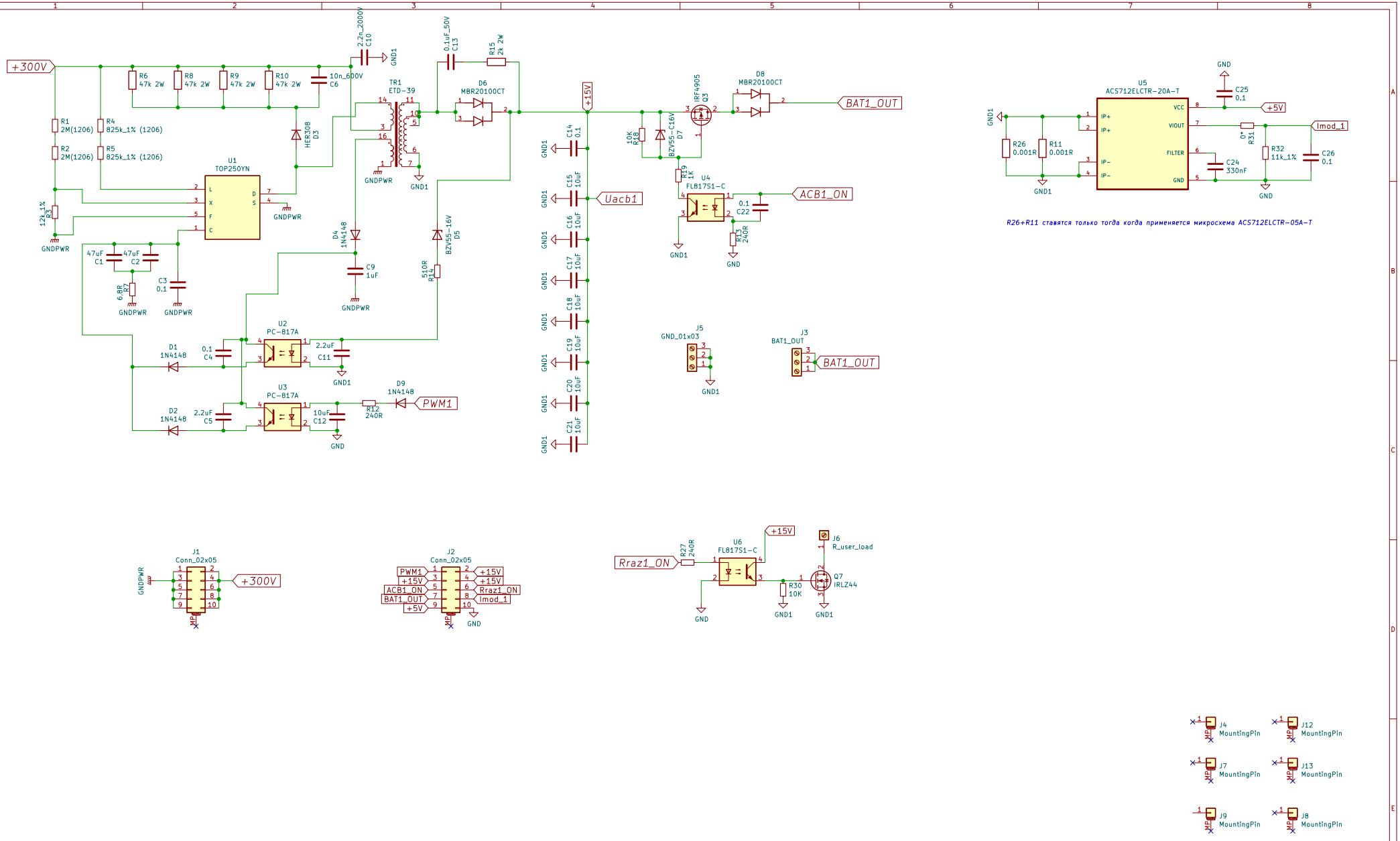

Versiya8_Power_module

Sheet: /
File: _Ver8_module.kicad_sch 10_05_2022

Title:

Size: A3 | Date: | **Rev:**
KiCad E.D.A. kicad (6.0.5) | Id: 1/1